外转子轴流风机
Axial fans

风机型号说明 Illustration of fan motor model

YWF 4 E – 350 S – P 102 / 34 – ★
① ②③ ④ ⑤ ⑥ ⑦ ⑧ ⑨

① 交流感应异步外转子风扇电动机
AC Induction asynchronous external rotor fan motor
② 电机极数
Motor poles
③ E–单相电容运转，D–三相异步运转
E–Single phase capactior operation，D–Three phase asynchronous operation
④ 风叶直径
The diameter of the fan blade
⑤ 风向：S–吸风，B–吹风
Air direction:S–Sucking，B–Blowing
⑥ 此处空白表示标准型风机，“P”表示通过ErP能效标准
The blank here means the standard fan motors,"P" means it passes ErP
⑦ 转子直径
The diameter of the rotor
⑧ 铁芯叠厚
The thickness of laminated core
⑨ 风机特征：
G–网罩、B–方框、T–圆筒、R–圆框、E–IP54、J–冷风机专用
Characteristics of the fan motor:
G–Grid,B–Square Frame,T–Cylinder,R–Round Frame,E–Insulation class IP54,
J–Special for air cooler

接线图 Wiring diagram

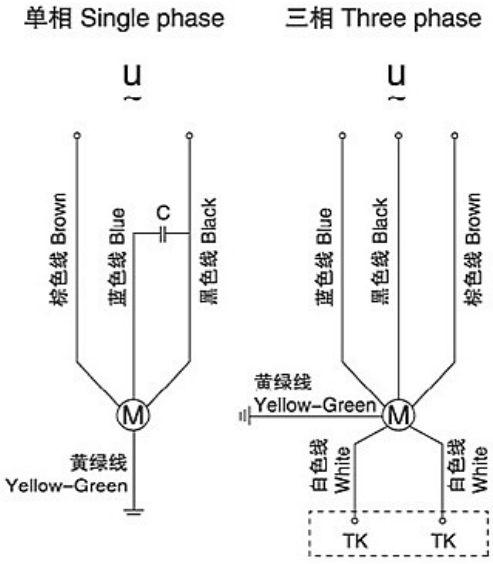

● **能效数据说明（符合ErP指令）**

测量类别: A
能效类别: 静压
功率范围（kW）: 0.125≤P≤10
能效指标计算: η=2.74xln(P)–6.33+36

● **Energy effciency data according to ErP directive**

Measurement category: A
Effciency category: Static
Power range(Pin kW): 0.125≤P≤10
Target energy efficiency: η=2.74xln(P)–6.33+36

* all model could be customized on voltage or any other requirements to fit your need
* http:// www.jingdafan.com

Ø 350

JING DA FAN

外转子轴流风机

Axial fans

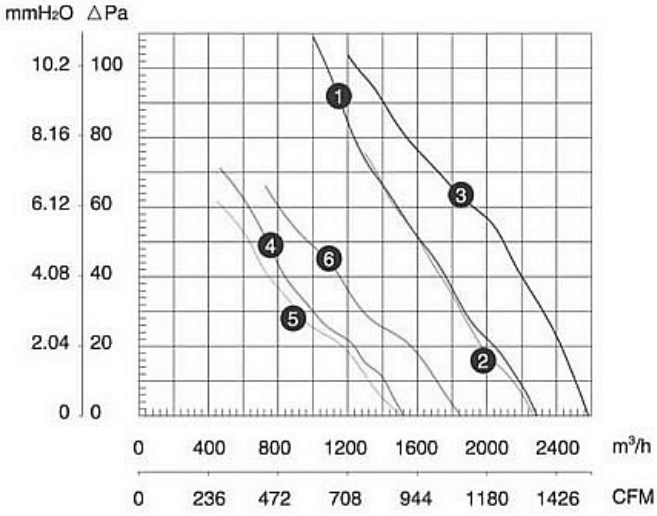

使用说明:

工作方式：S1
绝缘等级：B级 F级
环境温度：-30℃～60℃

应用范围:

4D-350 380V/50Hz 0~90Pa (20Pa-2090m³/h)
4E-350 220V/50Hz 0~90Pa (20Pa-1960m³/h)
4E-350 120V/60Hz 0~90Pa (20Pa-2440m³/h)
6D-350 380V/50Hz 0~60Pa (20Pa-1170m³/h)
6E-350 220V/50Hz 0~60Pa (20Pa-1240m³/h)
6E-350 120V/60Hz 0~60Pa (20Pa-1156m³/h)

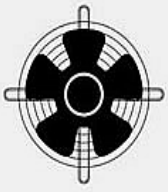	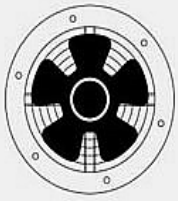		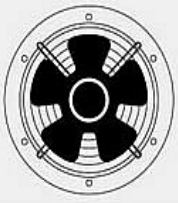	VOLTAGE 额定电压 V
JD-YWF-4D-350-S-102/34-G	JD-YWF-4D-350-S-102/34-T	JD-YWF-4D-350-S-102/34-B	JD-YWF-4D-350-S-102/34-R	380
JD-YWF-4E-350-S-102/34-G	JD-YWF-4E-350-S-102/34-T	JD-YWF-4E-350-S-102/34-B	JD-YWF-4E-350-S-102/34-R	220
				120
JD-YWF-6D-350-S-102/34-G	JD-YWF-6D-350-S-102/34-T	JD-YWF-6D-350-S-102/34-B	JD-YWF-6D-350-S-102/34-R	380
JD-YWF-6E-350-S-102/34-G	JD-YWF-6E-350-S-102/34-T	JD-YWF-6E-350-S-102/34-B	JD-YWF-6E-350-S-102/34-R	220
				120

FREQUENCY 频率 Hz	CURRENT 额定电流 A	INPUT 输入功率 W	SPEED 额定转速 r/min	AIR VOLUME 额定风量 m³/h	CAPACITANCE 电容 μF	NOISE 噪音 dBA	NET WEIGHT 净重 kg	LICENSE 证书	NO.ON THE CURVE
50	0.38	140	1380	2290	/	62	5.0	CE	1
50	0.65	140	1380	2270	4	62	5.0	CE	2
60	1.65	180	1600	2580	16	62	5.0		3
50	0.30	80	920	1520	/	56	5.0	CE	4
50	0.40	80	920	1590	3	56	5.0	CE	5
60	0.68	80	1080	1840	8	56	5.0		6

* all model could be customized on voltage or any other requirements to fit your need
* http:// www.jingdafan.com

外转子轴流风机
Axial fans

UNITS:mm

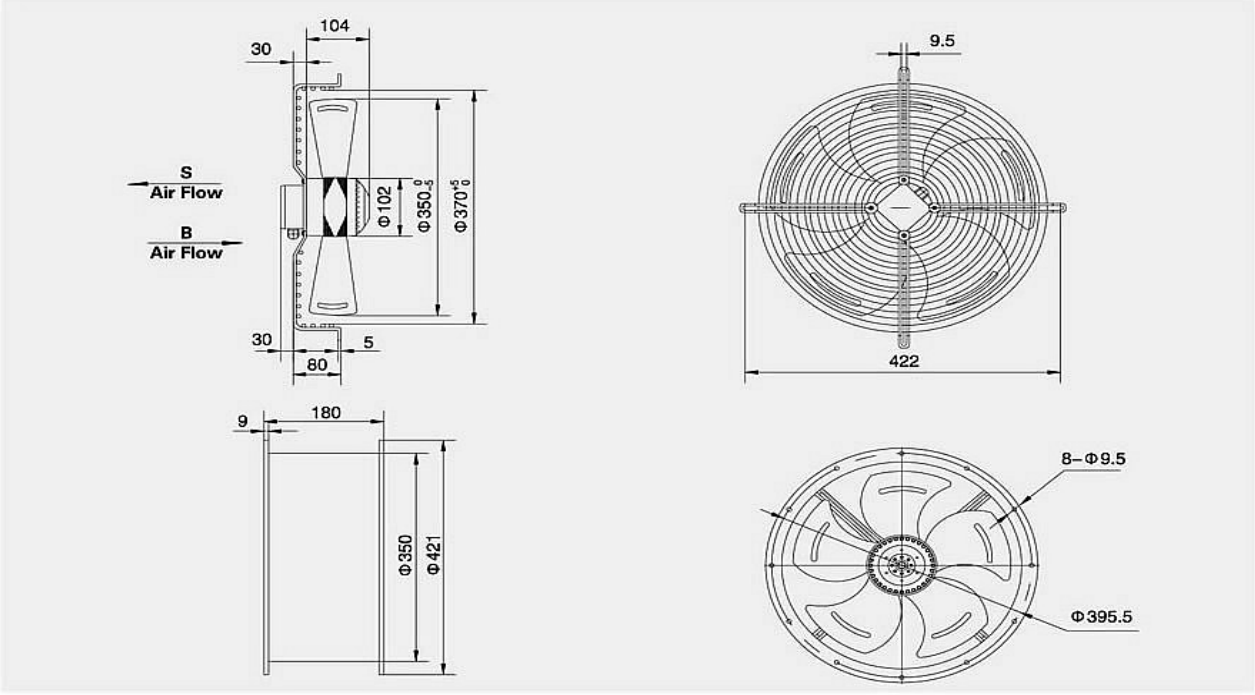

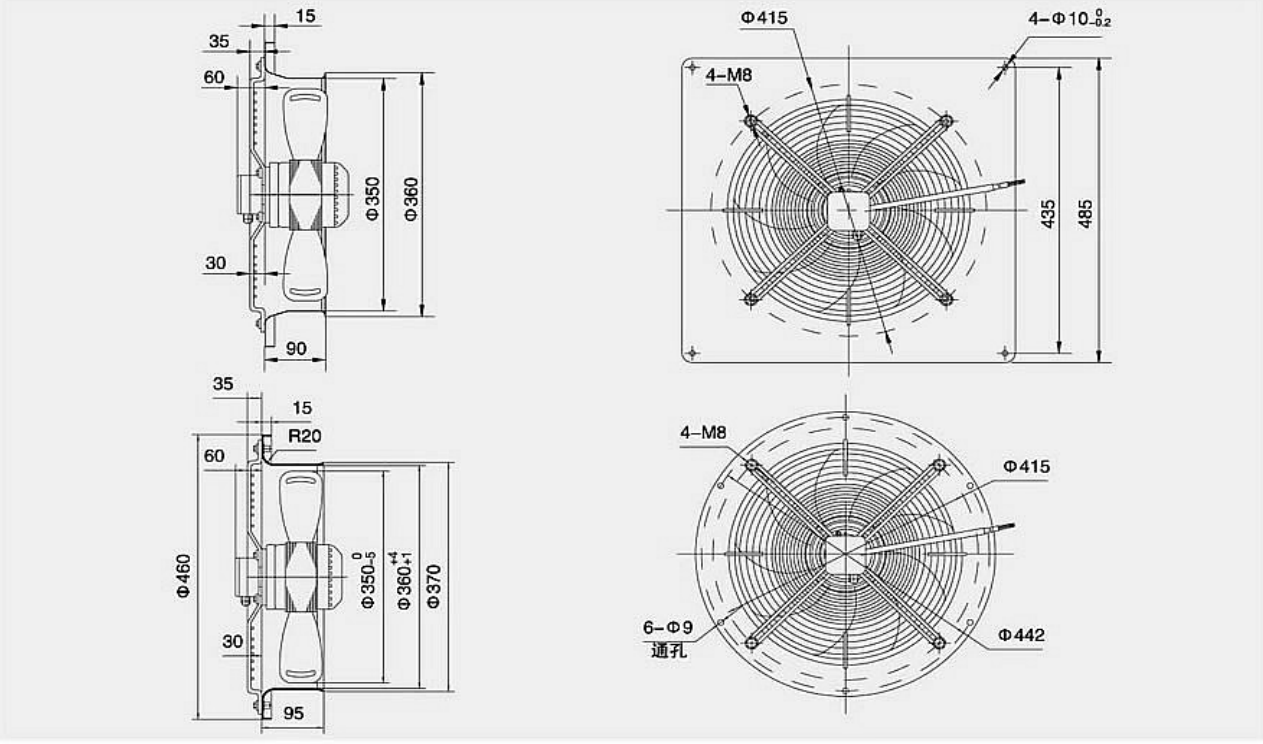

* all model could be customized on voltage or any other requirements to fit your need
* http:// www.jingdafan.com